Portalampada Switch

AH142-RM

copper

The product is EN60598-2 compliant

Technical data

Voltage	230 V
Dimensions	Ø50 mm h100 mm
Mounting	E27 connection
Material	Metal, bakelite inside
Finish	copper -RM

Made in Italy

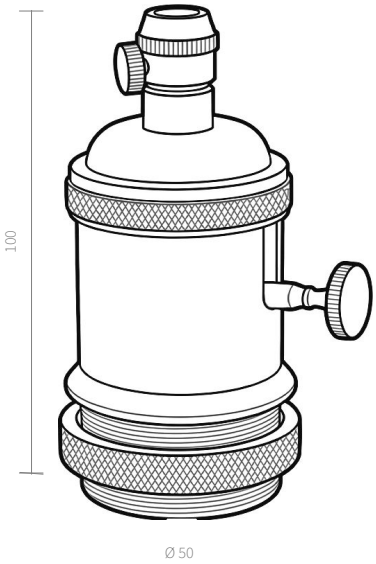



Specification text

Switch E27 lampholder in metal with Bakelite interior, Ø50 × h100 mm, copper finish, 230 V supply. Code AH142-RM.

Installation

Installation: E27 connection.

Notes: Switch E27 lampholder.

AMARCORDS S.R.L. · amarcords.com
VAT IT09021550968 · SDI SUBM70N
Tel. +39 02 97132845
Registered office: Via Piero della Francesca, 35 - 20154 Milano, Italy
Logistics and offices: Via G. Falcone, 7 - 20024 Garbagnate Milanese (MI)