Level 2

FB016-PE

mini GU10 or LED module Mini 35 mm petrol

The product is EN60598-2 compliant

Technical data

Voltage	230 V
Light source	mini GU10 or LED module Mini 35 mm not included
Ingress protection	IP20
Dimensions	Ø63 mm
Cut-out	Ø55 mm, mini GU10: min h60 mm, LED module Mini: min h35 mm
Material	Aluminium
Finish	petrol -PE

Made in Italy

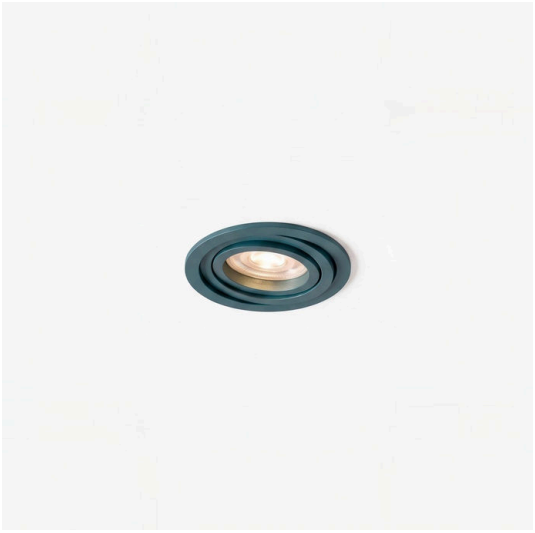

Bulb

Bulb not included: a mini GU10 bulb or a Mini 35 mm LED module is required.

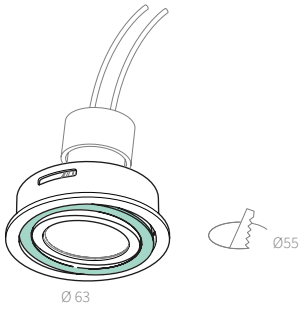

Specification text

Adjustable recessed downlight Level 2, aluminium Ø63 mm, petrol finish, for a Ø55 mm cut-out, with quick access. Designed for a mini GU10 bulb or Ø35 mm LED module, not included. Minimum ceiling void 35 mm with LED module, 60 mm with mini GU10. 230 V supply, ingress protection IP20. Code FB016-PE.

Notes: Adjustable. Quick access.

AMARCORDS S.R.L. · amarcords.com
VAT IT09021550968 · SDI SUBM70N
Tel. +39 02 97132845
Registered office: Via Piero della Francesca, 35 - 20154 Milano, Italy
Logistics and offices: Via G. Falcone, 7 - 20024 Garbagnate Milanese (MI)