Square tilting 2

FB429-MA

GU10 or LED module 50 mm brick

The product is EN60598-2 compliant

Technical data

Voltage	230 V
Light source	GU10 or LED module 50 mm not included
Ingress protection	IP20
Dimensions	175 × 92 mm
Cut-out	Ø75 mm x 2, GU10: min h65 mm, LED module: min h35 mm
Material	Aluminium
Finish	brick -MA

Made in Italy



Bulb

Bulb not included: a GU10 bulb or a 50 mm LED module is required.

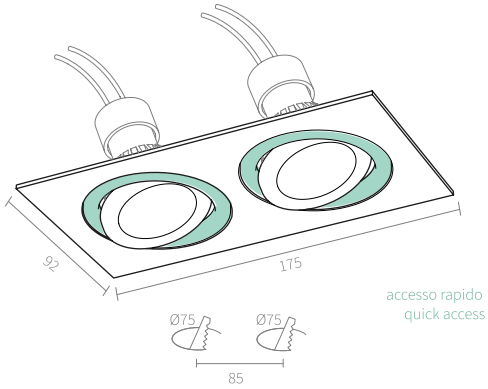

Specification text

Adjustable recessed downlight with two lights Square tilting 2, aluminium 175 × 92 mm, brick finish, for two Ø75 mm cut-outs, with quick access. Designed for 2 GU10 bulbs or Ø50 mm LED modules, not included. Minimum ceiling void 35 mm with LED module, 65 mm with GU10. 230 V supply, ingress protection IP20. Code FB429-MA.

Notes: Adjustable. Quick access.

AMARCORDS S.R.L. · amarcords.com
VAT IT09021550968 · SDI SUBM70N
Tel. +39 02 97132845
Registered office: Via Piero della Francesca, 35 - 20154 Milano, Italy
Logistics and offices: Via G. Falcone, 7 - 20024 Garbagnate Milanese (MI)