Level 0

FF016-BI

mini GU10 or LED module Mini 35 mm white

The product is EN60598-2 compliant

Technical data

Voltage	230 V
Light source	mini GU10 or LED module Mini 35 mm not included
Ingress protection	IP20
Dimensions	Ø63 mm h24 mm
Cut-out	Ø44 mm, mini GU10: min h55 mm, LED module Mini: min h30 mm
Material	Aluminium
Finish	white -BI

Made in Italy



Bulb

Bulb not included: a mini GU10 bulb or a Mini 35 mm LED module is required.

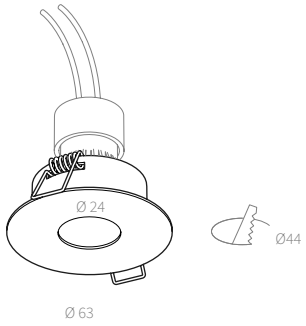

Specification text

Recessed downlight Level 0, aluminium Ø63 × h24 mm, white finish, for a Ø44 mm cut-out. Designed for a mini GU10 bulb or Ø35 mm LED module, not included. Minimum ceiling void 30 mm with LED module, 55 mm with mini GU10. 230 V supply, ingress protection IP20. Code FF016-BI.

AMARCORDS S.R.L. · amarcords.com
VAT IT09021550968 · SDI SUBM70N
Tel. +39 02 97132845
Registered office: Via Piero della Francesca, 35 - 20154 Milano, Italy
Logistics and offices: Via G. Falcone, 7 - 20024 Garbagnate Milanese (MI)