Square recessed

FR419-OT

GU10 or LED module 50 mm brass

The product is EN60598-2 compliant

Technical data

Voltage	230 V
Light source	GU10 or LED module 50 mm not included
Ingress protection	IP20
Dimensions	90 × 90 mm h44 mm
Cut-out	80 × 80 mm, GU10: min h85 mm, LED module: min h55 mm
Material	Aluminium
Finish	brass -OT

Made in Italy



Bulb

Bulb not included: a GU10 bulb or a 50 mm LED module is required.

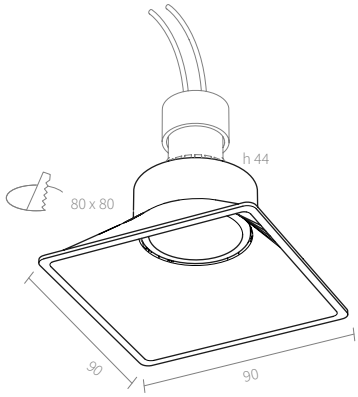

Specification text

Adjustable recessed downlight Square recessed, aluminium 90 × 90 × h44 mm, brass finish, for an 80 × 80 mm cut-out. Designed for a GU10 bulb or Ø50 mm LED module, not included. Minimum ceiling void 55 mm with LED module, 85 mm with GU10. 230 V supply, ingress protection IP20. Code FR419-OT.

Notes: Adjustable.

AMARCORDS S.R.L. · amarcords.com
VAT IT09021550968 · SDI SUBM70N
Tel. +39 02 97132845
Registered office: Via Piero della Francesca, 35 - 20154 Milano, Italy
Logistics and offices: Via G. Falcone, 7 - 20024 Garbagnate Milanese (MI)