Hidden IP

FR516-DE

mini GU10 or LED module Mini 35 mm desert

The product is EN60598-2 compliant

Technical data

Voltage	230 V
Light source	mini GU10 or LED module Mini 35 mm not included
Ingress protection	IP54
Dimensions	Ø66 mm
Cut-out	Ø60 mm, mini GU10: min h75 mm, LED module Mini: min h50 mm
Material	Aluminium
Finish	desert -DE

Made in Italy



Bulb

Bulb not included: a mini GU10 bulb or a Mini 35 mm LED module is required.

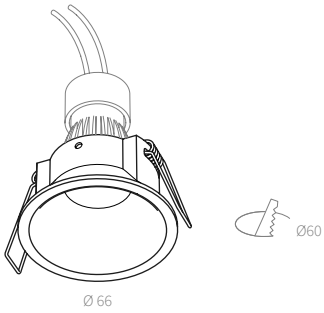

Specification text

Recessed downlight Hidden IP, aluminium Ø66 mm, desert finish, for a Ø60 mm cut-out, with quick access. Designed for a mini GU10 bulb or Ø35 mm LED module, not included. Minimum ceiling void 50 mm with LED module, 75 mm with mini GU10. 230 V supply, ingress protection IP54. Code FR516-DE.

Notes: Quick access.

AMARCORDS S.R.L. · amarcords.com
VAT IT09021550968 · SDI SUBM70N
Tel. +39 02 97132845
Registered office: Via Piero della Francesca, 35 - 20154 Milano, Italy
Logistics and offices: Via G. Falcone, 7 - 20024 Garbagnate Milanese (MI)