Maxi square

FX417-PE

AR111 or LED module Maxi 111 mm petrol

The product is EN60598-2 compliant

Technical data

Voltage	230 V
Light source	AR111 or LED module Maxi 111 mm not included
Ingress protection	IP20
Dimensions	175 × 175 mm h20 mm
Cut-out	150 × 150 mm, AR111: min h150 mm, LED module Maxi: min h105 mm
Material	Aluminium
Finish	petrol -PE

Made in Italy

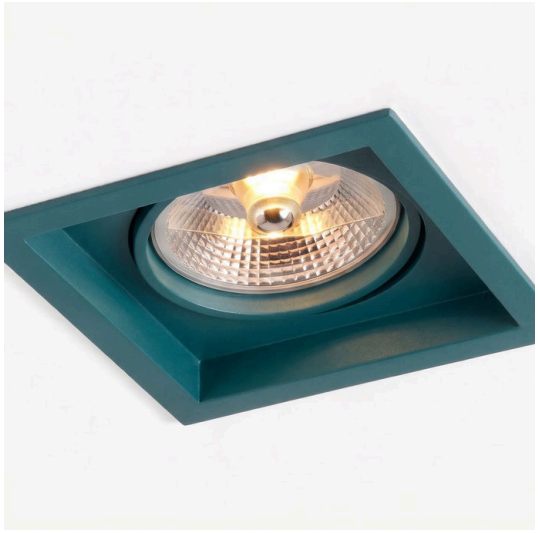

Bulb

Bulb not included: an AR111 bulb or a Maxi 111 mm LED module is required.

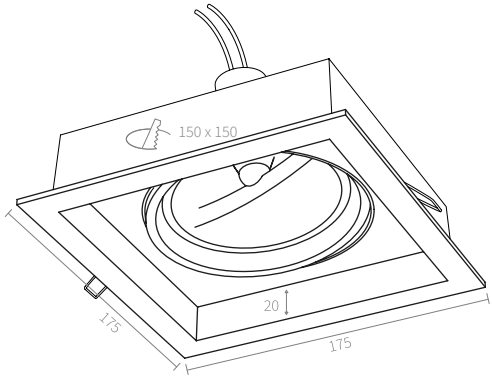

Specification text

Adjustable recessed downlight Maxi square, aluminium 175 × 175 × h20 mm, petrol finish, for a 150 × 150 mm cut-out. Designed for an AR111 bulb or AR111 LED module, not included. Minimum ceiling void 105 mm with LED module, 150 mm with AR111. 230 V supply, ingress protection IP20. Code FX417-PE.

Notes: Adjustable.

AMARCORDS S.R.L. · amarcords.com
VAT IT09021550968 · SDI SUBM70N
Tel. +39 02 97132845
Registered office: Via Piero della Francesca, 35 - 20154 Milano, Italy
Logistics and offices: Via G. Falcone, 7 - 20024 Garbagnate Milanese (MI)