Cricco E27.1

TA201-OT

E27 brass

The product is EN60598-2 compliant

Technical data

Voltage	230 V
Light source	E27
Ingress protection	IP20
Dimensions	Ø42 mm h130 mm rotation H360° V90°
Mounting	with screws
Material	Aluminium
Finish	brass -OT

Made in Italy



Bulb

Bulb not included: an E27 bulb is required.

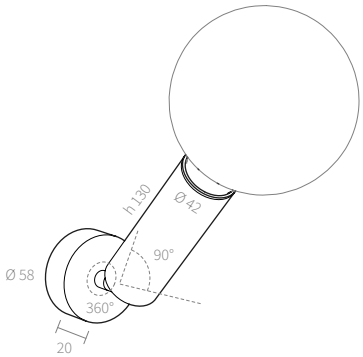

Specification text

Adjustable single-light wall light Cricco E27.1, with cylindrical aluminium body Ø42 × h130 mm, rotating 360° horizontally and tilting 90° vertically, brass finish, screw-fixed. E27 lampholder, bulb not included. 230 V supply, ingress protection IP20. Code TA201-OT.

Installation

Installation: with screws.

AMARCORDS S.R.L. · amarcords.com
VAT IT09021550968 · SDI SUBM70N
Tel. +39 02 97132845
Registered office: Via Piero della Francesca, 35 - 20154 Milano, Italy
Logistics and offices: Via G. Falcone, 7 - 20024 Garbagnate Milanese (MI)