Mensoled

WALL LIGHT

DCX(02/03/04)XX-XX

IP20

LED MODULE 180°

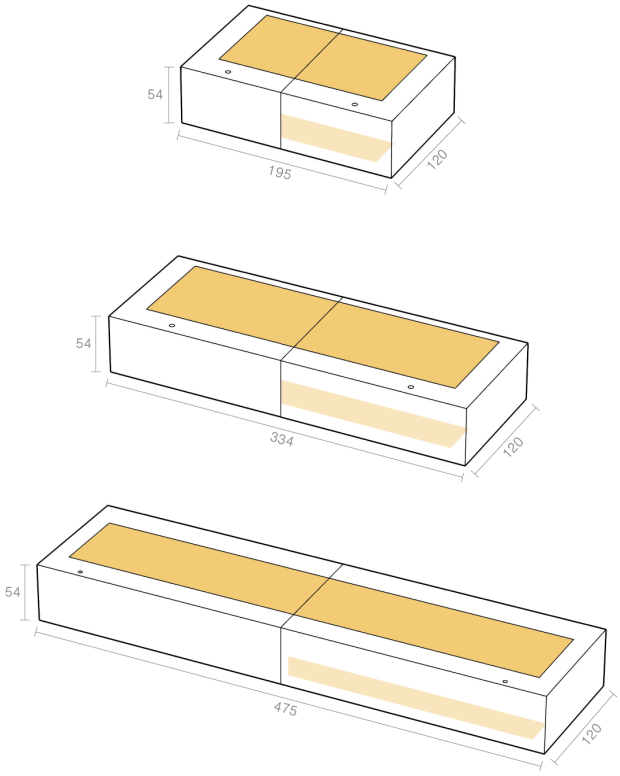

Mensoled installation manual, mono and bi emission version

Read carefully and keep for future reference.

Testing and Certification

All our products are Made in Italy, Certified and individually tested according to the EN60598-2 electrical safety directives:

- Dielectric Strength Measurement
- Earth Continuity Resistance Measurement
- Power Consumption Measurement
- Residual Voltage Measurement

Warnings

Our products are fitted with light sources that can be replaced by specialized users.
Energy classes are indicated on the relevant technical data sheets at www.amarcords.com

Please ensure that the appliance is not subjected to mechanical loads.

Handle the appliance with care. The device can be damaged by impacts, knocks, or falls, even from a small height.

Before use, check that the device shows no visible external damage. Do not use the appliance if it is damaged.

Do not open the housing, as this could cause an electric shock.

Do not attempt to disassemble, repair, or otherwise modify the appliance.

LED light sources may only be replaced by specialized personnel.

Repairs and installations must be carried out exclusively by a qualified technician. Never attempt to repair the appliance yourself. Improper repairs can pose significant risks to the user and will invalidate any warranty claim.

The warranty is immediately void in the event of damage resulting from failure to comply with these instructions. The manufacturer accepts no liability for damage resulting from failure to follow these instructions, improper use, or use not in accordance with the conditions of this user manual.

Do not allow children to clean or repair the appliance without supervision.

To avoid damage, never immerse the unit in water or any other liquid.

Warning! Do not look directly at the lit LEDs of the product for long periods of time. LED sources can cause eye damage or irritation. Do not view the light source directly using an optical instrument that concentrates the light beams.

Sede legale: Via Piero della Francesca, 35 - 20154 Milano – Logistica e Uffici: Via G.Falcone, 7 - 20024 Garbagnate Milanese (MI) P.Iva 09021550968
Tel. +39 02 97132845 Sdi: SUBM70N

LED MODULE 180°

Mensoled 20

DCX02XX-XX

Power	24W+5,4W
Luminous fl.	2700K-2548lm+850lm 3000K-2682lm+894lm 4000K-2823lm+941lm
Voltage	230 VAC
Lifetime	50.000 h
Dimming steps	3 STEP
Class	Class II
Ambient t.	TA25°C
CRI	≥90
Energy class	D

Mensoled 30

DCX03XX-XX

Power	33W+11W
Luminous fl.	2700K-5092lm+1697lm 3000K-5360lm+1787lm 4000K-5643lm+1881lm
Voltage	230 VAC
Lifetime	50.000 h
Dimming steps	3 STEP
Class	Class II
Ambient t.	TA25°C
CRI	≥90
Energy class	D

Mensoled 40

DCX04XX-XX

Power	49,2W+16,4W
Luminous fl.	2700K-7675lm+2558lm 3000K-8079lm+2693lm 4000K-8505lm+2835lm
Voltage	230 VAC
Lifetime	50.000 h
Dimming steps	3 STEP
Class	Class II
Ambient t.	TA25°C
CRI	≥90
Energy class	D

The product is supplied with a TCI LED module with energy efficiency class D.
The technical tables show the specifications of the dual-emission version of the product. For further information, refer to the catalog or visit https://amarcords.com/

01 → Ensure that the main power is disconnected



Before performing any installation or maintenance work on the product, ensure that the main power is disconnected.

02 → Separating the Bracket

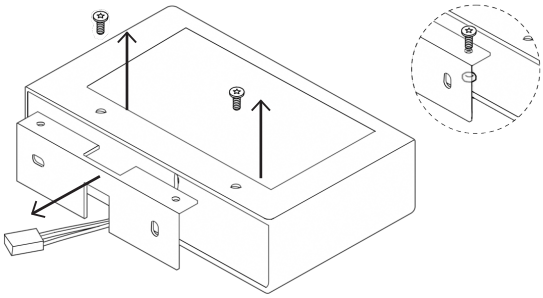

Remove the screws and nuts to separate the mounting bracket from the lamp body.

03 → Positioning the holes

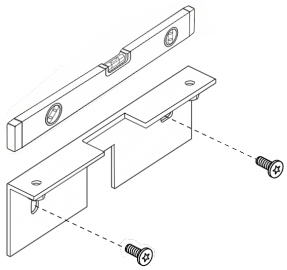

Position the bracket on the wall and mark the drilling points, checking that it is perfectly level using a spirit level.

Sede legale: Via Piero della Francesca, 35 - 20154 Milano – Logistica e Uffici: Via G.Falcone, 7 - 20024 Garbagnate Milanese (MI) P.Iva 09021550968
Tel. +39 02 97132845 Sdi: SUBM70N

04 → Wall fixing

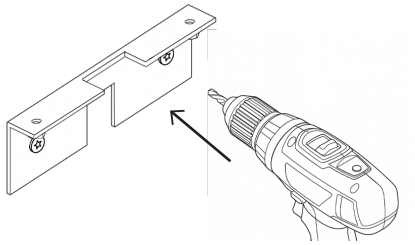

Securely anchor the bracket to the wall using the supplied wall plugs.

05 → Electrical connection

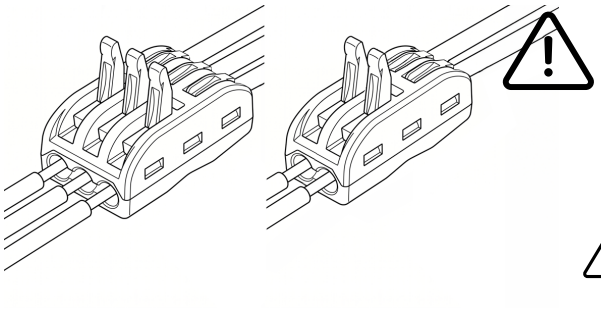

Connect the supplied 3-way terminal block to the mains cables, making sure there is no mains voltage present for the entire duration of the installation. Make the connections according to the following colour code:

- Brown or Black → with Brown/Black (live)
- Blue → with Blue (neutral)
- Yellow/Green → with Yellow/Green (earth)

  At this point, the LED module has been correctly connected.

⚠ In the dimmable versions, the wiring diagram is the same for the Triac dimmer, while the Push and Dali versions have an additional 2-way terminal block for connecting the push-button cables coming from the system.

06 → Mounting and Securing

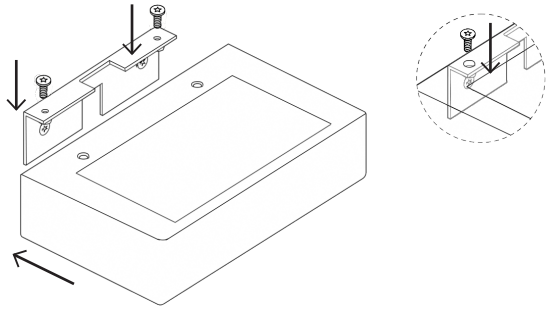

Bring the lamp body up to the previously installed bracket and lock it in place by carefully tightening the screws and nuts.

07 → Final position

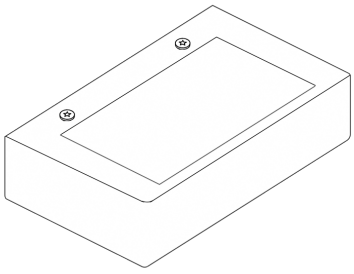

The light fitting will therefore be installed in its final position.

Sede legale: Via Piero della Francesca, 35 - 20154 Milano – Logistica e Uffici: Via G.Falcone, 7 - 20024 Garbagnate Milanese (MI) P.Iva 09021550968
Tel. +39 02 97132845 Sdi: SUBM70N