Verdana

PENDANT LIGHT

DSX(09/12/15)XXX-XX

IP20

STRIP LED 120°

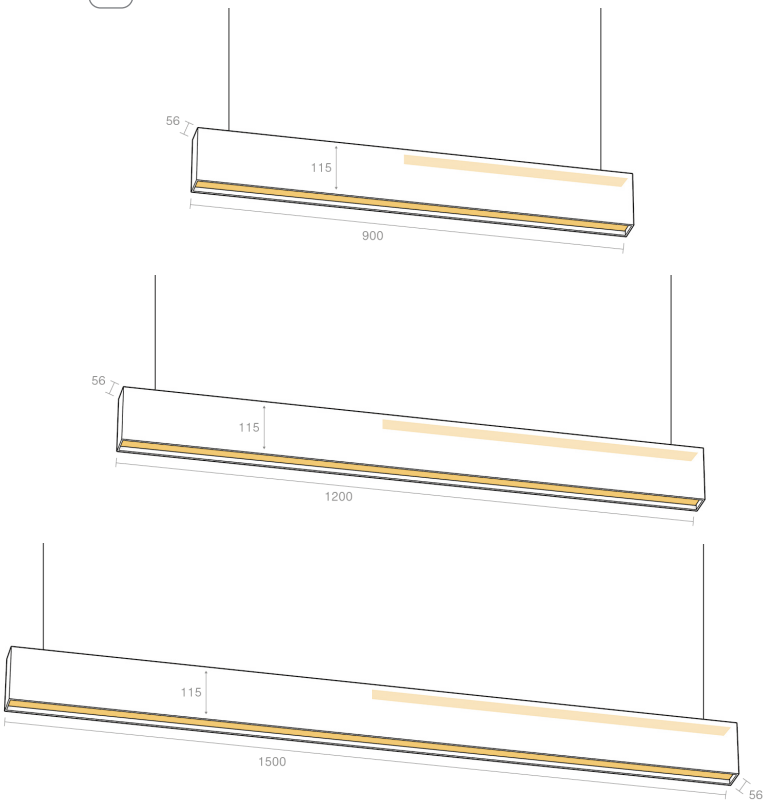

Verdana installation manual, mono and bi emission version

Read carefully and keep for future reference.

Testing and Certification

All our products are Made in Italy, Certified and individually tested according to the EN60598-2 electrical safety directives:

- Dielectric Strength Measurement
- Earth Continuity Resistance Measurement
- Power Consumption Measurement
- Residual Voltage Measurement

Warnings

Our products are fitted with light sources that can be replaced by specialized users.
Energy classes are indicated on the relevant technical data sheets at www.amarcords.com

Please ensure that the appliance is not subjected to mechanical loads.

Handle the appliance with care. The device can be damaged by impacts, knocks, or falls, even from a small height.

Before use, check that the device shows no visible external damage. Do not use the appliance if it is damaged.

Do not open the housing, as this could cause an electric shock.

Do not attempt to disassemble, repair, or otherwise modify the appliance.

LED light sources may only be replaced by specialized personnel.

Repairs and installations must be carried out exclusively by a qualified technician. Never attempt to repair the appliance yourself. Improper repairs can pose significant risks to the user and will invalidate any warranty claim.

The warranty is immediately void in the event of damage resulting from failure to comply with these instructions. The manufacturer accepts no liability for damage resulting from failure to follow these instructions, improper use, or use not in accordance with the conditions of this user manual.

Do not allow children to clean or repair the appliance without supervision.

To avoid damage, never immerse the unit in water or any other liquid.

Warning! Do not look directly at the lit LEDs of the product for long periods of time. LED sources can cause eye damage or irritation. Do not view the light source directly using an optical instrument that concentrates the light beams.

Sede legale: Via Piero della Francesca, 35 - 20154 Milano – Logistica e Uffici: Via G.Falcone, 7 - 20024 Garbagnate Milanese (MI) P.Iva 09021550968
Tel. +39 02 97132845 Sdi: SUBM70N

STRIP LED 120°

Verdana 90

DSX09XXX-XX

Power	54W
Luminous fl.	2700K-3960lm+3960lm 3000K-3996lm+3996lm 4000K-4140lm+4140lm
Voltage	230 VAC
Lifetime	50.000 h
Dimming steps	3 STEP
Class	Class II
Ambient t.	TA25°C
CRI	≥90
Energy class	E

Verdana 120

DSX12XXX-XX

Power	72W
Luminous fl.	2700K-4560lm+4560lm 3000K-4800lm+4800lm 4000K-5040lm+5040lm
Voltage	230 VAC
Lifetime	50.000 h
Dimming steps	3 STEP
Class	Class II
Ambient t.	TA25°C
CRI	≥90
Energy class	E

Verdana 150

DSX15XXX-XX

Power	90W
Luminous fl.	2700K-5700lm+5700lm 3000K-6000lm+6000lm 4000K-6300lm+6300lm
Voltage	230 VAC
Lifetime	50.000 h
Dimming steps	3 STEP
Class	Class II
Ambient t.	TA25°C
CRI	≥90
Energy class	E

The product is supplied with Amarcords LED strps with energy efficiency class E.
The technical tables show the specifications of the dual-emission version of the product. For further information, refer to the catalog or visit https://amarcords.com/

01 → Ensure that the main power is disconnected



Before performing any installation or maintenance work on the product, ensure that the main power is disconnected.

02 → Locating the power supply point

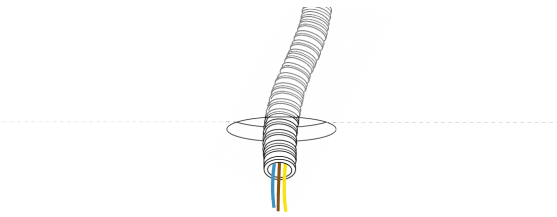

Locate on the ceiling the outlet point of the power supply cables to which the product will be connected, and use it as a reference to define the installation position.

03 → Installing the cable grippers

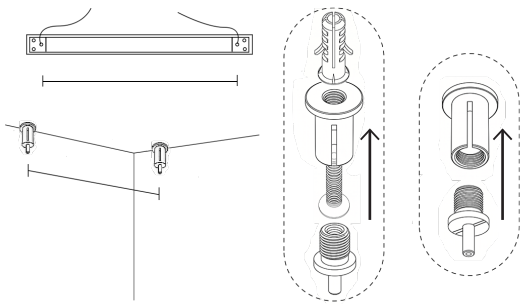

Measure the centre distance between the suspension cable attachment points, visible on the top of the product, and transfer it to the ceiling. Firmly anchor the two cable grippers to the ceiling at the marked points, using the appropriate wall plugs.

Sede legale: Via Piero della Francesca, 35 - 20154 Milano – Logistica e Uffici: Via G.Falcone, 7 - 20024 Garbagnate Milanese (MI) P.Iva 09021550968
Tel. +39 02 97132845 Sdi: SUBM70N

04 Inserting the suspension cables

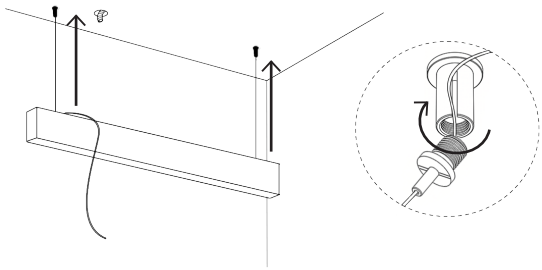

Insert each suspension cable into its cable gripper, first passing it through the lower cylinder:

- Press the lower cylinder to release the internal spring and allow the cable to slide.
- Screw the lower cap onto the body of the cable gripper fixed to the ceiling, letting the end of the cable come out of the side slot.

05 Electrical connection

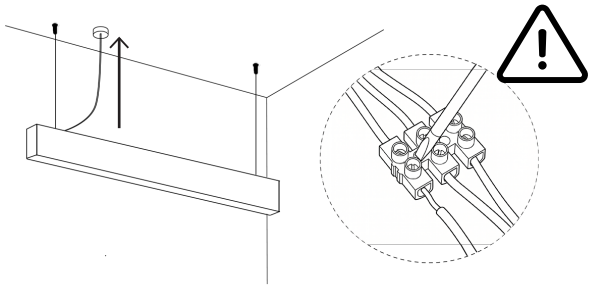

Connect the supplied terminal block to the mains cables, making sure there is no mains voltage present for the entire duration of the installation. Make the connections according to the following colour code:

- Brown or Black → with Brown/Black (live)
- Blue → with Blue (neutral)
- Yellow/Green → with Yellow/Green (earth)

Push any excess cable into the ceiling rose, making sure that all conductors are contained inside it before closing it.

06 Adjusting height and tilt

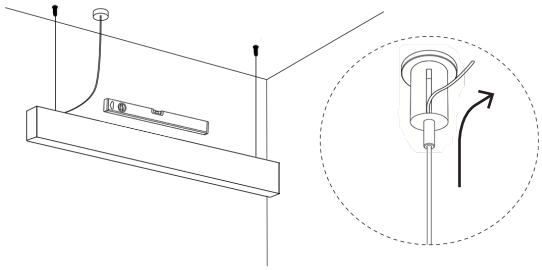

Adjust the height and tilt of the product by sliding the suspension cables through the cable grippers. To lower the product, press the lower cylinder to release the cable; to raise it, pull the end of the cable coming out of the side slot. Check correct horizontal alignment using a spirit level.

07 Final position

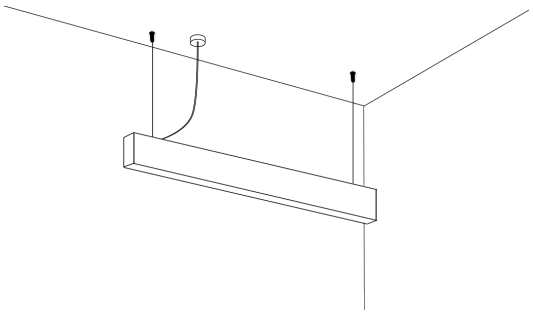

The product will then be installed in its final position.

Sede legale: Via Piero della Francesca, 35 - 20154 Milano – Logistica e Uffici: Via G.Falcone, 7 - 20024 Garbagnate Milanese (MI) P.Iva 09021550968
Tel. +39 02 97132845 Sdi: SUBM70N