Square flat

DOWNLIGHTS

FF418-XX

IP20

GU10

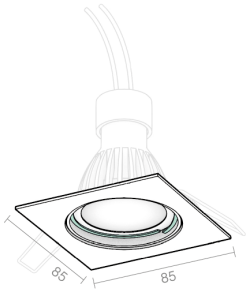

Square flat installation manual

Read carefully and keep for future reference.

Testing and Certification

All our products are Made in Italy, Certified and individually tested according to the EN60598-2 electrical safety directives:

- Dielectric Strength Measurement
- Earth Continuity Resistance Measurement
- Power Consumption Measurement
- Residual Voltage Measurement

Warnings

Our products are fitted with light sources that can be replaced by specialized users.
Energy classes are indicated on the relevant technical data sheets at www.amarcords.com

Please ensure that the appliance is not subjected to mechanical loads.

Handle the appliance with care. The device can be damaged by impacts, knocks, or falls, even from a small height.

Before use, check that the device shows no visible external damage. Do not use the appliance if it is damaged.

Do not open the housing, as this could cause an electric shock.

Do not attempt to disassemble, repair, or otherwise modify the appliance.

LED light sources may only be replaced by specialized personnel.

Repairs and installations must be carried out exclusively by a qualified technician. Never attempt to repair the appliance yourself. Improper repairs can pose significant risks to the user and will invalidate any warranty claim.

The warranty is immediately void in the event of damage resulting from failure to comply with these instructions. The manufacturer accepts no liability for damage resulting from failure to follow these instructions, improper use, or use not in accordance with the conditions of this user manual.

Do not allow children to clean or repair the appliance without supervision.

To avoid damage, never immerse the unit in water or any other liquid.

Warning! Do not look directly at the lit LEDs of the product for long periods of time. LED sources can cause eye damage or irritation. Do not view the light source directly using an optical instrument that concentrates the light beams.

Sede legale: Via Piero della Francesca, 35 - 20154 Milano – Logistica e Uffici: Via G.Falcone, 7 - 20024 Garbagnate Milanese (MI) P.Iva 09021550968
Tel. +39 02 97132845 Sdi: SUBM70N

GU10

N bulb

BG8X

Power	7W
Luminous fl.	728lm
Power factor	0,7
CRI	>80Ra
Beam angle	60°
Voltage	230 VAC
Lifetime	30.000 h
Ambient t.	-20°→+40°C
Energy class	E

H bulb

BG9X

Power	10W
Luminous fl.	1248lm
Power factor	0,9
CRI	>95Ra
Beam angle	60°
Voltage	230 VAC
Lifetime	30.000 h
Ambient t.	-20°→+40°C
Energy class	E

LED module

MG9X

Power	9W
Luminous fl.	850lm
Power factor	0,8
CRI	>95Ra
Beam angle	60°
Voltage	230 VAC
Lifetime	30.000 h
Ambient t.	-20°→+40°C
Energy class	E

The fixture is supplied without light source (bulb or LED module), which must be ordered separately.

01 → Ensure that the main power is disconnected



Before performing any installation or maintenance work on the product, ensure that the main power is disconnected.

02 → Checking the recess hole size

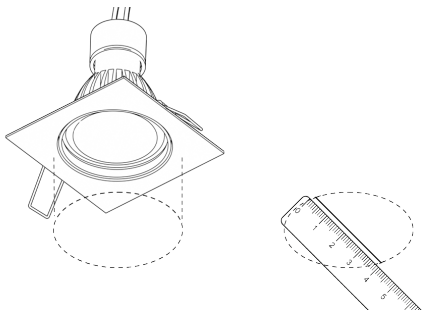

Measure the recess diameter of the downlight, or use the drilling template with its dimensions, to determine the correct size before cutting.

The plasterboard cutting templates are available in the appendix to this manual or can be downloaded from amarcords.com.

03 → Cutting the recess hole

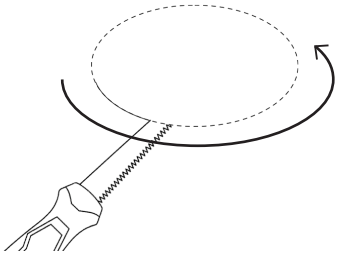

Cut the plasterboard panel, following the diameter or outline determined in the previous step. Make sure the edges are clean so that the fitting can be inserted correctly.

Sede legale: Via Piero della Francesca, 35 - 20154 Milano – Logistica e Uffici: Via G.Falcone, 7 - 20024 Garbagnate Milanese (MI) P.Iva 09021550968
Tel. +39 02 97132845 Sdi: SUBM70N

04 → Electrical connection

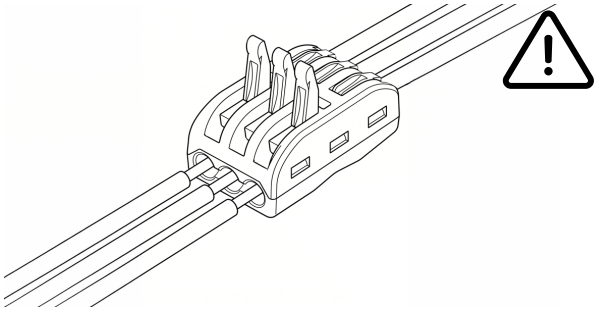

Connect the supplied 3-way terminal block to the mains cables, making sure there is no mains voltage present for the entire duration of the installation. Make the connections according to the following colour code:

- Brown or Black → with Brown/Black (live)
- Blue → with Blue (neutral)
- Yellow/Green → with Yellow/Green (earth)

05 → Inserting the fixture

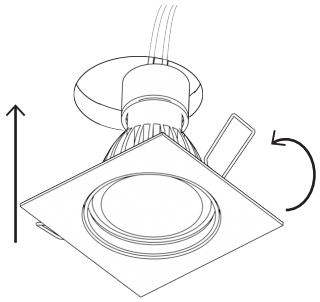

Insert the downlight into the prepared hole while holding the fixing springs pressed upwards. Once the fitting is in position inside the hole, release the springs so that they anchor to the false ceiling.

06 → Final position

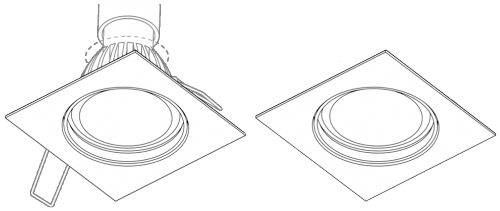

The product will then be installed in its final position.

Sede legale: Via Piero della Francesca, 35 - 20154 Milano – Logistica e Uffici: Via G.Falcone, 7 - 20024 Garbagnate Milanese (MI) P.Iva 09021550968
Tel. +39 02 97132845 Sdi: SUBM70N

01 Ensure that the main power is disconnected



Before performing any installation or maintenance work on the product, ensure that the main power is disconnected.

02 Removing the retaining clip

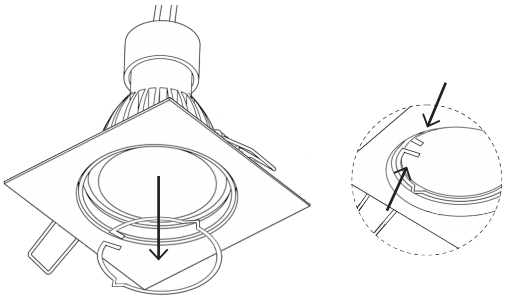

Squeeze the two ends of the spring inward to release it from its circular groove. Remove it completely to access the bulb.

03 Removing the bulb

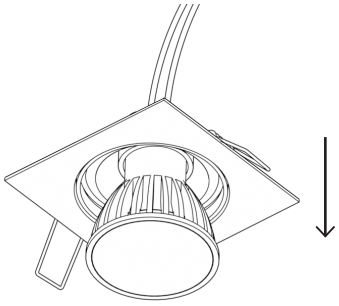

Pull the bulb out of the socket housing to replace it.

Sede legale: Via Piero della Francesca, 35 - 20154 Milano – Logistica e Uffici: Via G.Falcone, 7 - 20024 Garbagnate Milanese (MI) P.Iva 09021550968
Tel. +39 02 97132845 Sdi: SUBM70N

FF418-XX

Ø70 mm

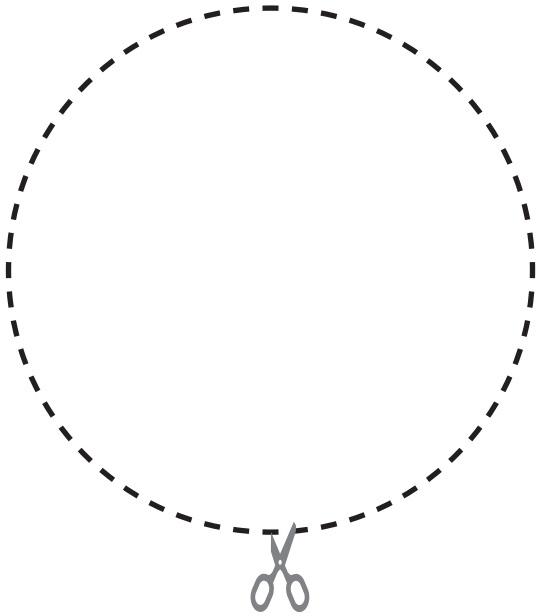

Sede legale: Via Piero della Francesca, 35 - 20154 Milano – Logistica e Uffici: Via G.Falcone, 7 - 20024 Garbagnate Milanese (MI) P.Iva 09021550968
Tel. +39 02 97132845 Sdi: SUBM70N