Luna IP54

WALL LIGHT

SA06(1/2/5)XX-XX

IP54

STRIP LED

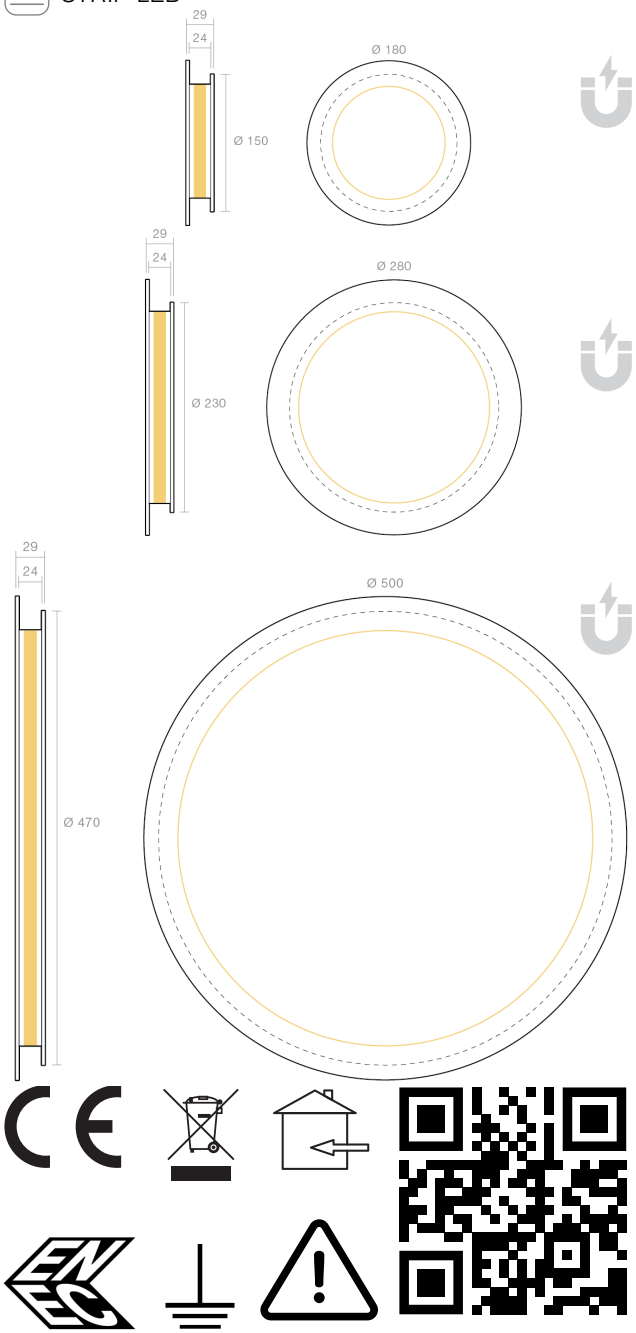

Luna IP54 installation manual

Read carefully and keep for future reference.

Testing and Certification

All our products are Made in Italy, Certified and individually tested according to the EN60598-2 electrical safety directives:

- Dielectric Strength Measurement
- Earth Continuity Resistance Measurement
- Power Consumption Measurement
- Residual Voltage Measurement

Warnings

Our products are fitted with light sources that can be replaced by specialized users.
Energy classes are indicated on the relevant technical data sheets at www.amarcords.com

Please ensure that the appliance is not subjected to mechanical loads.

Handle the appliance with care. The device can be damaged by impacts, knocks, or falls, even from a small height.

Before use, check that the device shows no visible external damage. Do not use the appliance if it is damaged.

Do not open the housing, as this could cause an electric shock.

Do not attempt to disassemble, repair, or otherwise modify the appliance.

LED light sources may only be replaced by specialized personnel.

Repairs and installations must be carried out exclusively by a qualified technician. Never attempt to repair the appliance yourself. Improper repairs can pose significant risks to the user and will invalidate any warranty claim.

The warranty is immediately void in the event of damage resulting from failure to comply with these instructions. The manufacturer accepts no liability for damage resulting from failure to follow these instructions, improper use, or use not in accordance with the conditions of this user manual.

Do not allow children to clean or repair the appliance without supervision.

To avoid damage, never immerse the unit in water or any other liquid.

Warning! Do not look directly at the lit LEDs of the product for long periods of time. LED sources can cause eye damage or irritation. Do not view the light source directly using an optical instrument that concentrates the light beams.

Sede legale: Via Piero della Francesca, 35 - 20154 Milano – Logistica e Uffici: Via G.Falcone, 7 - 20024 Garbagnate Milanese (MI) P.Iva 09021550968
Tel. +39 02 97132845 Sdi: SUBM70N

STRIP LED

Luna 18 IP54

SA061XX-XX

Power	8W
Luminous fl.	2700K-1081lm 3000K-1141lm 4000K-1201lm
Voltage	230 VAC
Lifetime	50.000 h
Dimming steps	3 STEP
Class	Class II
Ambient t.	TA25°C
CRI	≥90
Energy class	E

Luna 28 IP54

SA062XX-XX

Power	14W
Luminous fl.	2700K-1884lm 3000K-2014lm 4000K-2094lm
Voltage	230 VAC
Lifetime	50.000 h
Dimming steps	3 STEP
Class	Class II
Ambient t.	TA25°C
CRI	≥90
Energy class	E

Luna 50 IP54

SA065XX-XX

Power	26W
Luminous fl.	2700K-3631lm 3000K-3833lm 4000K-4034lm
Voltage	230 VAC
Lifetime	50.000 h
Dimming steps	3 STEP
Class	Class II
Ambient t.	TA25°C
CRI	≥90
Energy class	E

The product is supplied with Amarcords LED strps with energy efficiency class E.
For further information, refer to the catalog or visit https://amarcords.com/.

01 → Ensure that the main power is disconnected



Before performing any installation or maintenance work on the product, ensure that the main power is disconnected.

02 → Opening the product

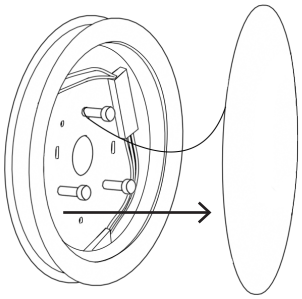

Make sure there is no mains voltage present. Open the product by separating the cover from the lamp body, then unscrew the pre-loosened nut that secures the safety cord to the cover.

The product is supplied with the cover attached to the lamp body by the safety cord.

03 → Wall or ceiling fixing

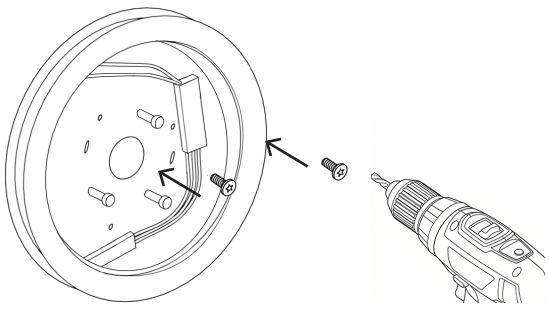

Install the support plate on the wall or ceiling using the appropriate wall plugs, making sure to align the central cable pass-through hole with the group of conductors coming from the wall or ceiling.

Sede legale: Via Piero della Francesca, 35 - 20154 Milano – Logistica e Uffici: Via G.Falcone, 7 - 20024 Garbagnate Milanese (MI) P.Iva 09021550968
Tel. +39 02 97132845 Sdi: SUBM70N

04 → Electrical connection of the perimeter LEDs

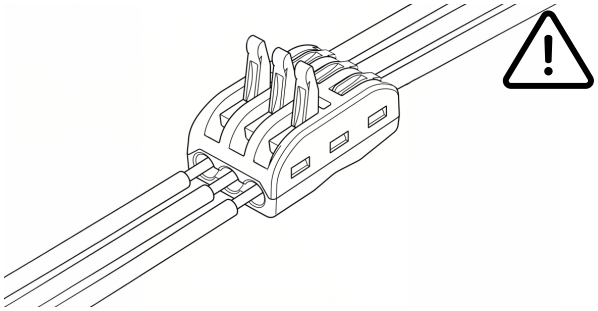

Connect the supplied 3-way terminal block to the mains cables, making sure there is no mains voltage present for the entire duration of the installation. Make the connections according to the following colour code:

- Brown or Black → with Brown/Black (live)
- Blue → with Blue (neutral)
- Yellow/Green → with Yellow/Green (earth)

05 → Attaching the safety cord

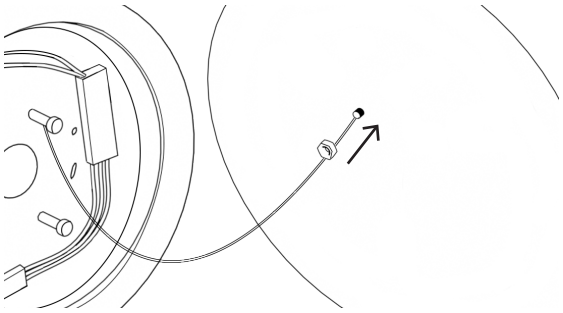

Insert the eyelet of the safety cord into position and screw the previously removed nut back on.

06 → Magnetic closure of the product

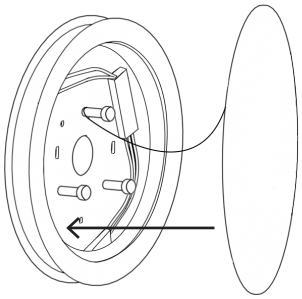

Bring the cover close to the lamp body until it is held firmly in place by the internal magnets.
In the IP54 version, pay attention to the protective sleeves when closing, to make sure they adhere correctly to the body and the cover.

07 → Final position

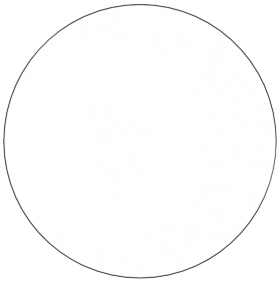

The product will therefore be in its final position.

Sede legale: Via Piero della Francesca, 35 - 20154 Milano – Logistica e Uffici: Via G.Falcone, 7 - 20024 Garbagnate Milanese (MI) P.Iva 09021550968
Tel. +39 02 97132845 Sdi: SUBM70N