Dana IP54

WALL LIGHT

SAX6(1/3/6/9)XX-XX

IP54

STRIP LED 120°

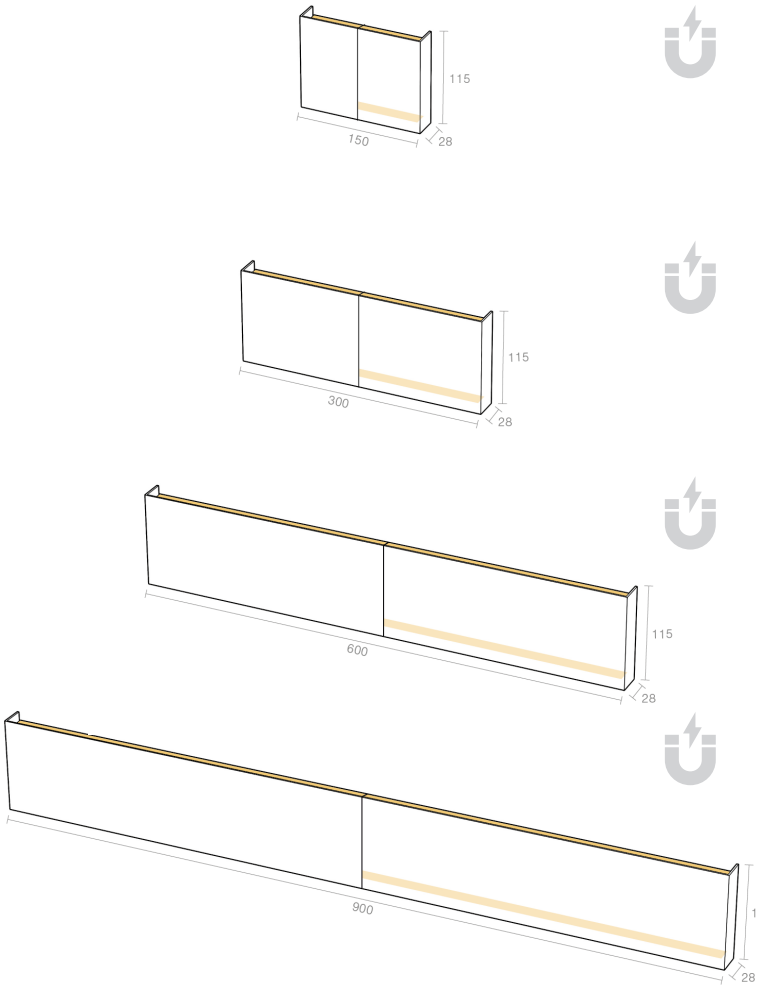

Dana IP54 installation manual, mono and bi emission version

Read carefully and keep for future reference.

Testing and Certification

All our products are Made in Italy, Certified and individually tested according to the EN60598-2 electrical safety directives:

- Dielectric Strength Measurement
- Earth Continuity Resistance Measurement
- Power Consumption Measurement
- Residual Voltage Measurement

Warnings

Our products are fitted with light sources that can be replaced by specialized users.
Energy classes are indicated on the relevant technical data sheets at www.amarcords.com

Please ensure that the appliance is not subjected to mechanical loads.

Handle the appliance with care. The device can be damaged by impacts, knocks, or falls, even from a small height.

Before use, check that the device shows no visible external damage. Do not use the appliance if it is damaged.

Do not open the housing, as this could cause an electric shock.

Do not attempt to disassemble, repair, or otherwise modify the appliance.

LED light sources may only be replaced by specialized personnel.

Repairs and installations must be carried out exclusively by a qualified technician. Never attempt to repair the appliance yourself. Improper repairs can pose significant risks to the user and will invalidate any warranty claim.

The warranty is immediately void in the event of damage resulting from failure to comply with these instructions. The manufacturer accepts no liability for damage resulting from failure to follow these instructions, improper use, or use not in accordance with the conditions of this user manual.

Do not allow children to clean or repair the appliance without supervision.

To avoid damage, never immerse the unit in water or any other liquid.

Warning! Do not look directly at the lit LEDs of the product for long periods of time. LED sources can cause eye damage or irritation. Do not view the light source directly using an optical instrument that concentrates the light beams.

Sede legale: Via Piero della Francesca, 35 - 20154 Milano – Logistica e Uffici: Via G.Falcone, 7 - 20024 Garbagnate Milanese (MI) P.Iva 09021550968
Tel. +39 02 97132845 Sdi: SUBM70N

STRIP LED 120°

Dana 15

SAX61XX-XX

Power	9W
Luminous fl.	2700K-1260lm 3000K-1332lm 4000K-1380lm
Voltage	230 VAC
Lifetime	50.000 h
Dimming steps	3 STEP
Class	Class II
Ambient t.	TA25°C
CRI	≥90
Energy class	E

Dana 30

SAX63XX-XX

Power	18W
Luminous fl.	2700K-2520lm 3000K-2664lm 4000K-2760lm
Voltage	230 VAC
Lifetime	50.000 h
Dimming steps	3 STEP
Class	Class II
Ambient t.	TA25°C
CRI	≥90
Energy class	E

Dana 60

SAX66XX-XX

Power	36W
Luminous fl.	2700K-5040lm 3000K-5328lm 4000K-5520lm
Voltage	230 VAC
Lifetime	50.000 h
Dimming steps	3 STEP
Class	Class II
Ambient t.	TA25°C
CRI	≥90
Energy class	E

Dana 90

SAX69XX-XX

Power	54W
Luminous fl.	2700K-7920lm 3000K-7992lm 4000K-8280lm
Voltage	230 VAC
Lifetime	50.000 h
Dimming steps	3 STEP
Class	Class II
Ambient t.	TA25°C
CRI	≥90
Energy class	E

The product is supplied with Amarcords LED strps with energy efficiency class E.
The technical tables show the specifications of the dual-emission version of the product. For further information, refer to the catalog or visit https://amarcords.com/.

01 → Ensure that the main power is disconnected



Before performing any installation or maintenance work on the product, ensure that the main power is disconnected.

02 → Locating the power supply point

Locate on the wall the outlet point of the power supply cables to which the product will be connected, and use it as a reference to define the installation position.

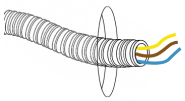

03 → Separating the mounting bracket

Separate the mounting bracket from the lamp body by releasing it from the magnetic coupling that holds it in place.

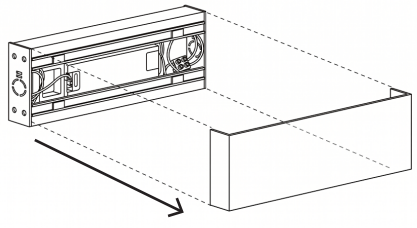

Sede legale: Via Piero della Francesca, 35 - 20154 Milano – Logistica e Uffici: Via G.Falcone, 7 - 20024 Garbagnate Milanese (MI) P.Iva 09021550968
Tel. +39 02 97132845 Sdi: SUBM70N

04 → Wall fixing

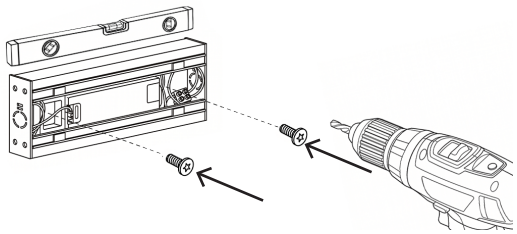

Firmly anchor the bracket to the wall using the appropriate wall plugs, checking that it is perfectly level using a spirit level.

05 → Electrical connection

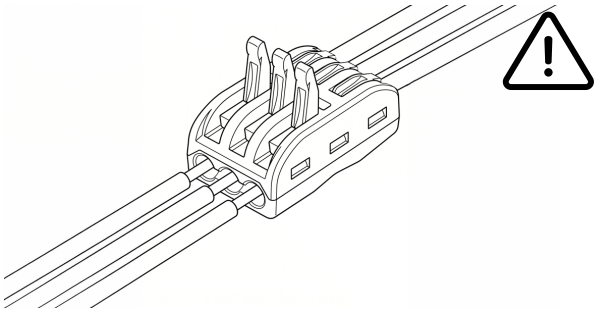

Connect the supplied 3-way terminal block to the mains cables, making sure there is no mains voltage present for the entire duration of the installation. Make the connections according to the following colour code:

- Brown or Black → with Brown/Black (live)
- Blue → with Blue (neutral)
- Yellow/Green → with Yellow/Green (earth)

The IP54 version has a gel-filled terminal block: make sure to close the container correctly afterwards.

06 → Closing the product

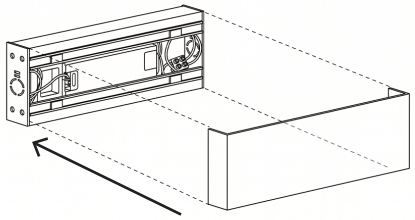

Bring the lamp body up to the bracket previously installed on the wall: the magnetic coupling ensures its centring and final locking.

07 → Final position

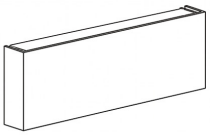

The light fitting will therefore be installed in its final position.

Sede legale: Via Piero della Francesca, 35 - 20154 Milano – Logistica e Uffici: Via G.Falcone, 7 - 20024 Garbagnate Milanese (MI) P.Iva 09021550968
Tel. +39 02 97132845 Sdi: SUBM70N