Orbita 28

WALL LIGHT

SAX28X-XX

IP20

E27

STRIP LED

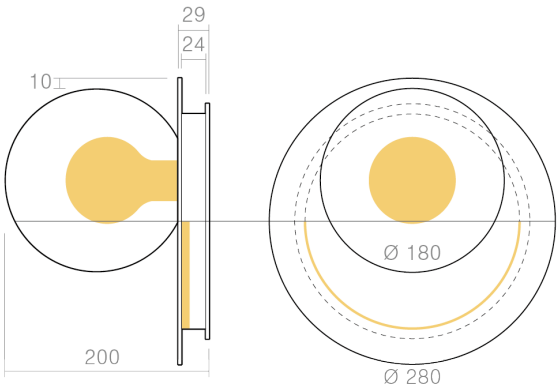

Orbita 28 installation manual, mono and bi emission version

Read carefully and keep for future reference.

Testing and Certification

All our products are Made in Italy, Certified and individually tested according to the EN60598-2 electrical safety directives:

- Dielectric Strength Measurement
- Earth Continuity Resistance Measurement
- Power Consumption Measurement
- Residual Voltage Measurement

Warnings

Our products are fitted with light sources that can be replaced by specialized users.
Energy classes are indicated on the relevant technical data sheets at www.amarcords.com

Please ensure that the appliance is not subjected to mechanical loads.

Handle the appliance with care. The device can be damaged by impacts, knocks, or falls, even from a small height.

Before use, check that the device shows no visible external damage. Do not use the appliance if it is damaged.

Do not open the housing, as this could cause an electric shock.

Do not attempt to disassemble, repair, or otherwise modify the appliance.

LED light sources may only be replaced by specialized personnel.

Repairs and installations must be carried out exclusively by a qualified technician. Never attempt to repair the appliance yourself. Improper repairs can pose significant risks to the user and will invalidate any warranty claim.

The warranty is immediately void in the event of damage resulting from failure to comply with these instructions. The manufacturer accepts no liability for damage resulting from failure to follow these instructions, improper use, or use not in accordance with the conditions of this user manual.

Do not allow children to clean or repair the appliance without supervision.

To avoid damage, never immerse the unit in water or any other liquid.

Warning! Do not look directly at the lit LEDs of the product for long periods of time. LED sources can cause eye damage or irritation. Do not view the light source directly using an optical instrument that concentrates the light beams.

Sede legale: Via Piero della Francesca, 35 - 20154 Milano – Logistica e Uffici: Via G.Falcone, 7 - 20024 Garbagnate Milanese (MI) P.Iva 09021550968
Tel. +39 02 97132845 Sdi: SUBM70N

E27 STRIP LED

Orbita 28

SAX28X-XX

Power	12W+20W
Luminous fl.	2700K-1080lm+2548lm 3000K-1150lm+2646lm 4000K-1210lm+2744lm
Voltage	230 VAC
Lifetime	50.000 h
Dimming steps	3 STEP
Class	Class II
Ambient t.	TA25°C
CRI	E27 CRI ≥80 · Strip Led CRI ≥90
Energy class	F

The product is supplied with Amarcords LED strps with energy efficiency class F
The technical tables show the specifications of the dual-emission version of the product. For further information, refer to the catalog or visit https://amarcords.com/

01 Ensure that the main power is disconnected



Before performing any installation or maintenance work on the product, ensure that the main power is disconnected.

02 Orienting the sphere

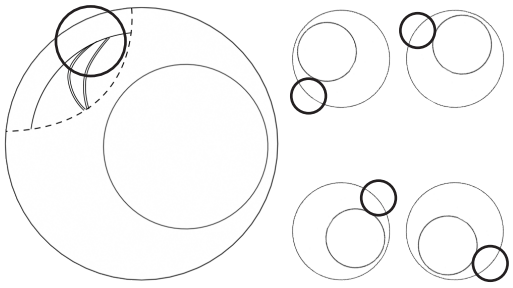

Orient the light fitting according to the chosen position of the sphere, locate the LED strip cable outlet hole and use it as a reference for wall fixing.

03 Bayonet unlatching

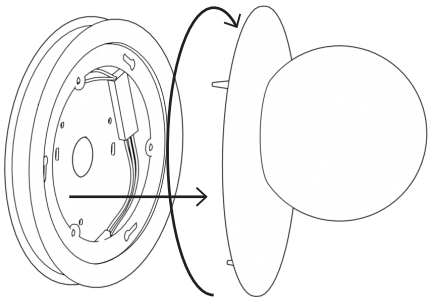

Make sure there is no mains voltage present. Open the product by turning it clockwise to release the bayonet fastening and separate the lamp body.

It is recommended to hold the lower plate firmly and turn the upper disc clockwise.

Sede legale: Via Piero della Francesca, 35 - 20154 Milano – Logistica e Uffici: Via G.Falcone, 7 - 20024 Garbagnate Milanese (MI) P.Iva 09021550968
Tel. +39 02 97132845 Sdi: SUBM70N

04 Wall fixing

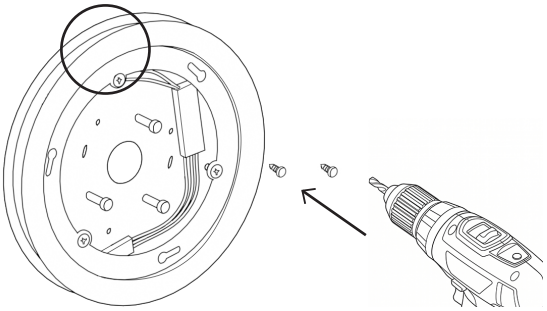

Install the support plate using the supplied wall plugs, orienting the piece according to the chosen direction of the central LED strip cable outlet hole (step 1), making sure to align the central cable pass-through hole with the group of conductors coming from the wall.

05 Electrical connection of the perimeter LEDs

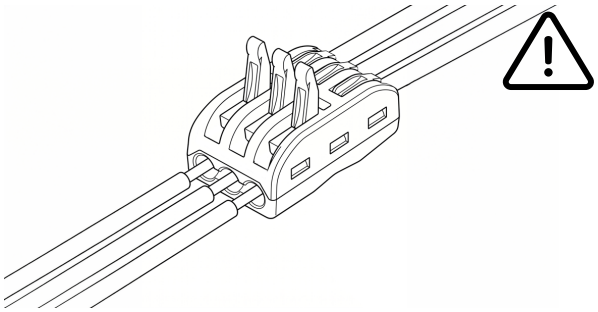

Connect the supplied 3-way terminal block to the mains cables, making sure there is no mains voltage present for the entire duration of the installation. Make the connections according to the following colour code:

- Brown or Black → with Brown/Black (live)
- Blue → with Blue (neutral)
- Yellow/Green → with Yellow/Green (earth)
  At this point, the perimeter LEDs have been correctly connected.

06 Powering the sphere

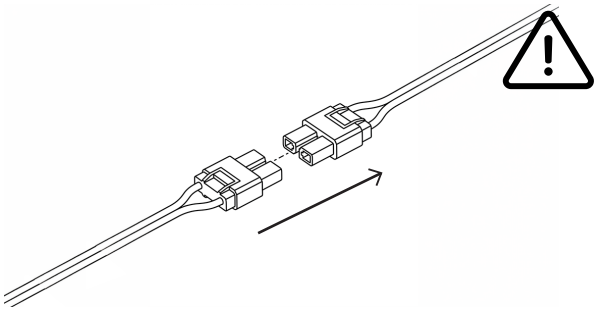

Join the quick connector coming from the plate with the quick connector of the “sphere” lamp body, applying light pressure until you hear the characteristic “click” confirming that the coupling has taken place. At this point, the “sphere” lamp body is connected to the 230 VAC mains supply.

07 Attaching the safety cord

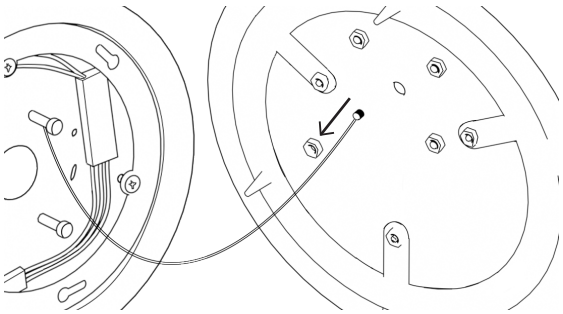

Unscrew one of the pre-loosened nuts on the lamp body disc, remove it, insert the eyelet of the safety cord into position, and screw the nut back in.

Sede legale: Via Piero della Francesca, 35 - 20154 Milano – Logistica e Uffici: Via G.Falcone, 7 - 20024 Garbagnate Milanese (MI) P.Iva 09021550968
Tel. +39 02 97132845 Sdi: SUBM70N

08 → Bayonet closure of the product

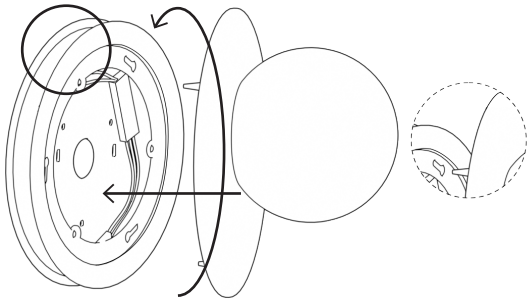

Bring the “sphere” lamp body close to the plate installed on the wall. Centring happens automatically thanks to the built-in magnets, which ensure correct positioning and stability of the disc. Insert the metal pins into the corresponding sockets on the plate, then turn the lamp body counter clockwise until fully locked. The magnetic bayonet fastening ensures a solid connection with no visible screws.

As indicated in Step 2, it is essential to choose the position of the sphere before starting the installation. The sphere is always positioned according to the indications given in Step 2

09 → Final position

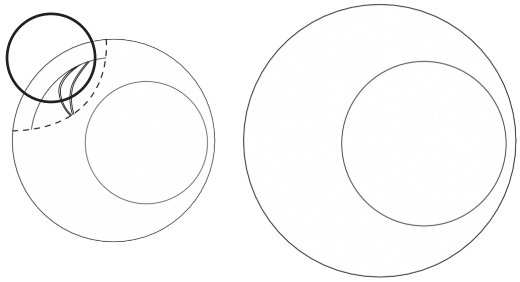

The light fitting will therefore be installed in its final position, chosen based on the location of the cable outlet hole (Step 2).

Sede legale: Via Piero della Francesca, 35 - 20154 Milano – Logistica e Uffici: Via G.Falcone, 7 - 20024 Garbagnate Milanese (MI) P.Iva 09021550968
Tel. +39 02 97132845 Sdi: SUBM70N

01 Ensure that the main power is disconnected



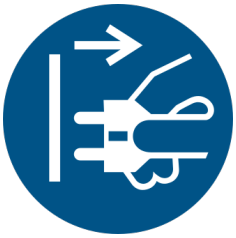

Before performing any installation or maintenance work on the product, ensure that the main power is disconnected.

02 Bayonet unlatching

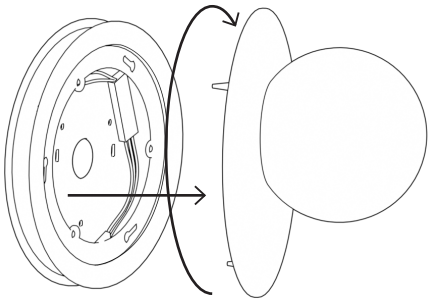

To access the lamp body and replace the bulb, make sure the power supply is switched off. Open the product by turning it clockwise to release the bayonet fastening and separate the lamp body. It is not necessary to remove the safety cord.

03 Accessing the lamp body

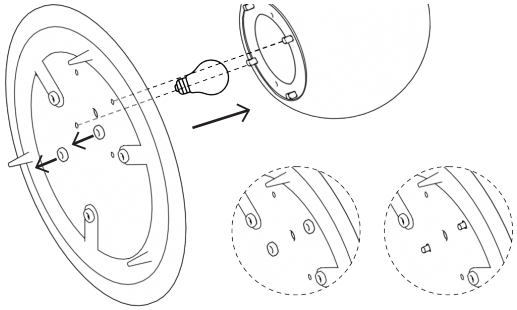

Unscrew the two nuts on the lamp body disc that hold the “sphere” in place. The sphere can now be removed to access the bulb for replacement. Turn the bulb counterclockwise and install a new one. Close the lamp body again by following the steps indicated above.

Sede legale: Via Piero della Francesca, 35 - 20154 Milano – Logistica e Uffici: Via G.Falcone, 7 - 20024 Garbagnate Milanese (MI) P.Iva 09021550968
Tel. +39 02 97132845 Sdi: SUBM70N