Kiatto

CEILING LIGHT

TP861X-XX

IP20

AR111

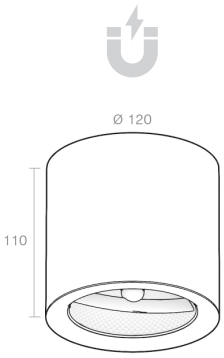

Kiatto installation manual

Read carefully and keep for future reference.

Testing and Certification

All our products are Made in Italy, Certified and individually tested according to the EN60598-2 electrical safety directives:

- Dielectric Strength Measurement
- Earth Continuity Resistance Measurement
- Power Consumption Measurement
- Residual Voltage Measurement

Warnings

Our products are fitted with light sources that can be replaced by specialized users.
Energy classes are indicated on the relevant technical data sheets at www.amarcords.com

Please ensure that the appliance is not subjected to mechanical loads.

Handle the appliance with care. The device can be damaged by impacts, knocks, or falls, even from a small height.

Before use, check that the device shows no visible external damage. Do not use the appliance if it is damaged.

Do not open the housing, as this could cause an electric shock.

Do not attempt to disassemble, repair, or otherwise modify the appliance.

LED light sources may only be replaced by specialized personnel.

Repairs and installations must be carried out exclusively by a qualified technician. Never attempt to repair the appliance yourself. Improper repairs can pose significant risks to the user and will invalidate any warranty claim.

The warranty is immediately void in the event of damage resulting from failure to comply with these instructions. The manufacturer accepts no liability for damage resulting from failure to follow these instructions, improper use, or use not in accordance with the conditions of this user manual.

Do not allow children to clean or repair the appliance without supervision.

To avoid damage, never immerse the unit in water or any other liquid.

Warning! Do not look directly at the lit LEDs of the product for long periods of time. LED sources can cause eye damage or irritation. Do not view the light source directly using an optical instrument that concentrates the light beams.

Sede legale: Via Piero della Francesca, 35 - 20154 Milano – Logistica e Uffici: Via G.Falcone, 7 - 20024 Garbagnate Milanese (MI) P.Iva 09021550968
Tel. +39 02 97132845 Sdi: SUBM70N

AR111

H bulb

TP861X-XX

Power	13W
Luminous fl.	900lm
Beam angle	45°
Voltage	230 VAC
Energy class	E

The fixture is supplied with an Amarcords bulb with efficiency class E.
For further information, refer to the catalog or visit https://amarcords.com/.

01 Ensure that the main power is disconnected



Before performing any installation or maintenance work on the product, ensure that the main power is disconnected.

02 Product as supplied

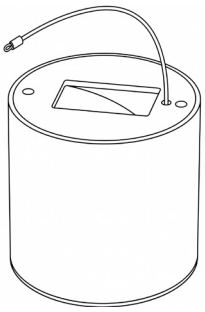

The product is supplied assembled, complete with a magnetic bracket and a pre-installed safety cord.

03 Separating the magnetic bracket

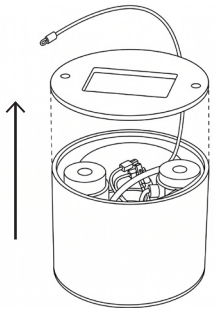

Separate the metal bracket from the lamp body by lifting it upwards to release it from the internal magnets.

It is recommended not to wear rings during installation, to prevent scratches or damage to the finish of the lamp body.

Sede legale: Via Piero della Francesca, 35 - 20154 Milano – Logistica e Uffici: Via G.Falcone, 7 - 20024 Garbagnate Milanese (MI) P.Iva 09021550968
Tel. +39 02 97132845 Sdi: SUBM70N

04 → Ceiling fixing and safety anchoring

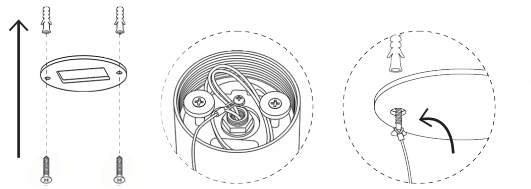

Firmly anchor the metal bracket to the ceiling using the appropriate wall plugs. During this operation, make sure to fit the eyelet of the safety cord onto one of the fixing screws before final tightening, so as to secure the lamp body to the ceiling.

05 → Electrical connection

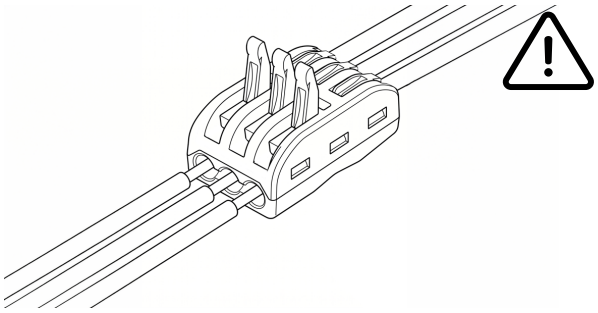

Connect the supplied 3-way terminal block to the mains cables, making sure there is no mains voltage present for the entire duration of the installation. Make the connections according to the following colour code:

- Brown or Black → with Brown/Black (live)
- Blue → with Blue (neutral)
- Yellow/Green → with Yellow/Green (earth)

06 → Final position

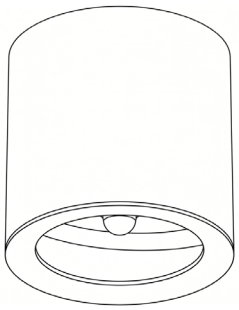

The product will then be installed in its final position.

Sede legale: Via Piero della Francesca, 35 - 20154 Milano – Logistica e Uffici: Via G.Falcone, 7 - 20024 Garbagnate Milanese (MI) P.Iva 09021550968
Tel. +39 02 97132845 Sdi: SUBM70N

01 Ensure that the main power is disconnected



Before performing any installation or maintenance work on the product, ensure that the main power is disconnected.

02 Removing the front ring

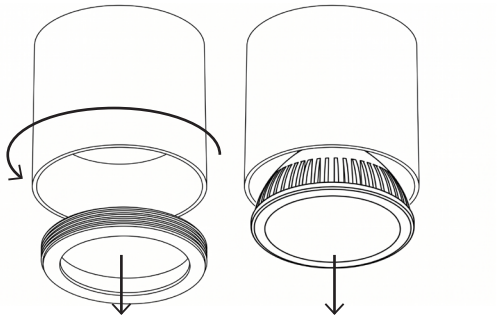

Unscrew the front ring and remove it from the lamp body to access the inner compartment and replace the bulb.

Sede legale: Via Piero della Francesca, 35 - 20154 Milano – Logistica e Uffici: Via G.Falcone, 7 - 20024 Garbagnate Milanese (MI) P.Iva 09021550968
Tel. +39 02 97132845 Sdi: SUBM70N